www.SimtechUSA.com

SIMTECH

Double Quik Installation Guide

Corrosion Resistant Fluid and Air Handling Systems.

TABLE OF CONTENTS

PREFACE....3
GENERAL PRECAUTIONS....3
1.0 INTRODUCTION....3
2.0 SCOPE AND APPLICATION....3
3.0 EQUIPMENT AND MATERIAL....4
3.01 Receiving, Handling and Storage....4
3.02 Material Handling....5
3.03 Pipe Storage....5
4.0 PREPARATION AND SET UP....5
5.0 EXCAVATION....6
5.01 Trenching....6
5.02 Special Trench Conditions....7
5.02.1 Rock Bottom Trench....7
5.02.2 Unstable Soil....7
5.02.3 Granular Soil....7
5.02.4 Over-excavation....7
6.0 DOUBLE QUIK ASSEMBLY....8
6.01 Layout....8
6.02 Lowering of the Piping....8
6.03 Pipe Connections....8
6.04 Welding Procedures....8
6.04.a Equipment Required....9
6.04.b Hot AIr Weld Procedure....9
6.05 Butt Fusion Weld Procedure....11
6.05.a Environmental Conditions....11
6.05.b Safety....11
6.05.c Welding Data Table....11
6.05.d Equipment Preparation....12
6.05.e Mounting Pipe in Machine....12
6.05.f Pipe Alignment....12
6.05.g Leak Detection Hole....13
6.05.h Drag Pressure....13
6.05.i Facing Operation....13
6.05.j Pipe Heating Procedure....14
6.05.k Final Weld Operation....15
7.0 BACKFILL PROCEDURES....17
7.01 Materials....17
7.02 Backfill Description....17
7.03 Initial Backfill....17
7.04 Final Backfill (95%) Compaction....18
APPENDIX A....20

SIMTECH
Phone: 877-777-2467 • Fax: 215-547-9129
www.SimtechUSA.com

PREFACE

The consulting engineer has been provided with information on what to expect from a SIMTECH DoubleQuik® system once it is installed. However, the true operating success of the system is greatly dependent upon proper installation. SIMTECH is committed to supporting the proper installation of a complete and high-quality piping system. This support includes clear and concise installation recommendations and expert field technical assistance.

The objective of this manual is to aid the installer on recommended installation procedures of a DoubleQuik® piping system. This booklet contains information on all aspects of the installation process, from initial receiving and storage through final backfill. The manual has been divided into sections, one section for each phase of the installation process. Each section contains an explanation and illustrations on proper installation procedures.

By following these step by step instructions, the installing contractor should achieve a successful installation.

1.0 INTRODUCTION

DoubleQuik® is a thermoplastic double contained piping system for the distribution of fluids and can be used to transport most organic solvents, dilute acids, many strong acids and alkalis.

The DoubleQuik® system has been designed with the installer in mind. DoubleQuik® arrives at the project site partially assembled. In-plant fabrication means less field work and fewer complications. This significantly reduces the installation cost while maintaining the integrity of the system. The features that make DoubleQuik® unique extend beyond the product itself. An expert project design staff tailors each system to meet the needs of the customer. Also, an experienced technical service staff is avail-able to provide assistance that will assure a quick and smooth installation.

A series of factors contribute to a reliable, high quality piping system, such as design, construction, delivery, installation and testing, with stringent quality control procedures applied at every step. The importance of proper installation practices for any piping system and adherences to this procedure, in particular, cannot be overstated. When installed according to the recommended practices presented in this manual and from SIMTECH technical service, DoubleQuik® will provide excellent service, meeting or exceeding expectations.

2.0 SCOPE AND APPLICATION

The scope of this procedure is limited to DoubleQuik® piping systems. This procedure covers the butt fusion welding process in both leak detected and non-leak detected systems. This procedure conforms to ASTM D2657, Standard Practice for Heat Joining Polyolefin Pipe and Fittings. The polyolefin thermoplastic materials within the scope of this procedure are:

Polypropylene - usually cream or tan in color
Polyvinylidene Fluroride - usually milky white or gray in color

This procedure applies to the customer-designated contractor who will perform the installation. A factory-trained, experienced field installation instructor will be on site at the time of job start-up to provide training on use of supplied welding equipment.

Trouble-free, efficient operation will result from close cooperation between the installing contractor and the field installation instructor. SIMTECH is committed to supporting the proper installation of a complete and high quality piping system. Nevertheless, ultimate responsibility for proper installation rests with the installing contractor.

3.0 EQUIPMENT AND MATERIAL

SIMTECH has furnished the following:
1. Pipe assemblies, fittings and accessories
2. Butt fusion welder
3. Hot air welder

Contractor must furnish the following:
1. Crane and excavation equipment
2. Cutting equipment
3. Power source

3.01 Receiving, Handling and Storage.

The piping was inspected and loaded with care at the factory. It is the responsibility of the receiver to ensure there has been no loss or damage. The following procedures are suggested to minimize problems:

- It is recommended that the SIMTECH field representative be present during receipt of the shipment.
- Check all shipped materials against the packing slip for shortages.
- Visually inspect the materials of shipment as they are unloaded.

A list of damages and / or shortages should be noted on the packing slip and the bill of lading. **DO NOT dispose of any damaged material.**

The carrier will notify you of the necessary procedure to be followed.

- Submit claims to the carrier. Failure to do so will result in loss of compensation for missing or damaged material.
- Notify your SIMTECH field representative of these claims if assistance is required. SIMTECH

3.02 Material Handling.

The means by which DoubleQuik® is unloaded and handled in the field is the decision and responsibility of the receiver. If damage does occur due to improper handling, any repairs must be made at the customer's expense. The following procedures are suggested to minimize problems:

- Support each assembly during all phases of handling.
- DO NOT use steel cables or chains for handling any DoubleQuik assemblies.
- DO NOT drop the DoubleQuik assemblies or strike them against hard surfaces at any time.

If an accident occurs, inspect the pipe for damages. Contact SIMTECH to repair or replace damaged product.

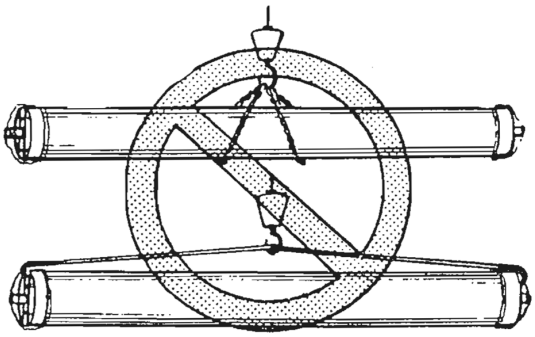

DO NOT use steel cables or chains for handling any DoubleQuik assemblies.

SIMTECH
Phone: 877-777-2467 • Fax: 215-547-9129
www.SimtechUSA.com

3.03 Pipe Storage.

DoubleQuik® assemblies can deteriorate and sustain damage if not stored properly. Proper storage of the product is the responsibility of the receiver. The following procedures are suggested to minimize problems:

- If possible, store the pipe in a warehouse or heated shelter. If this is not possible, store the pipe on high ground to avoid ingress of water into pipe ends.
- DoubleQuik can be stored during the winter months (or for prolonged periods of time) with minimal special handling.
- When stacking the DoubleQuik® for storage, stack it in the same fashion that it was received.
- Use foam or other padding between layers.
- DO NOT remove plastic covers or end caps from the DoubleQuik®, if present.

SIMTECH recommends using a light-colored or opaque tarpaulin to cover pipe stored for a prolonged period. This cover will protect it against ultraviolet (UV) rays that will discolor the piping.

4.0 PREPARATION AND SET UP

SIMTECH cannot anticipate every circumstance that might involve a hazard. The warnings in this procedure are not all inclusive. The installing contractor must satisfy himself that each procedure, tool, work method or operating technique is safe. SIMTECH recommends that only trained and qualified personnel perform the steps of the installation procedure. Proper implements, tools and equipment should be used for placement of the pipe in the trench to prevent damage. In no case should pipe or accessories be dropped into the trench. Additional handling and joining procedures are covered elsewhere in this manual. Pipe laying generally should commence at the lowest elevation and terminate at manholes, service branches or clean outs. Use the Pipe Drawing Layout to place the assemblies in correct order

5.0 EXCAVATION

5.01 Trenching.

All types of flexible pipe derive some of their strength from the passive soil resistance on the sides of the pipe. Therefore, the proper excavation of the trench is very important to ensure a structurally sound system. Usually, the center line dimensions for the placement of the pipe in the trench can be found in the drawings.

DoubleQuik® is designed to handle normal soil and H-20 loading. If SIMTECH's recommended procedures are followed, a minimum burial depth is required at taxiways, runways, railroads and other areas of high surface loading conditions. It is recommended that the customer contact both SIMTECH and the local authority for more specific burial instructions.

The trench should be considerably wider at field joint locations to allow room for welding equipment and field joint closure operations. The recommended trench width at field joint locations should be 36 inches plus the diameter of the conduit. The trench floor should be completely cleared of stones and rocks and covered with a 4-inch compacted bedding. The bedding soil should correspond with the soil description.

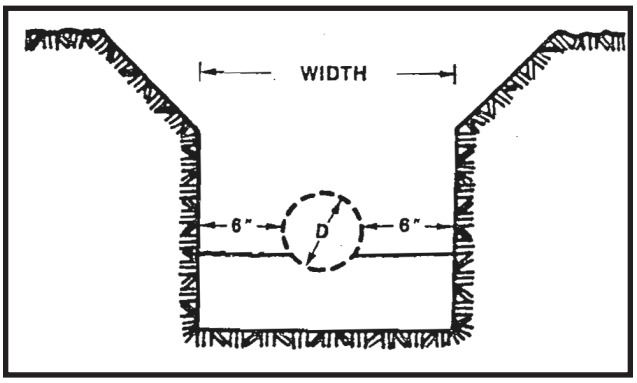

The minimum recommended trench width for single pipe is 12 inches plus the diameter of the conduit.

During excavation, an unstable soil condition may be encountered, particularly in installations with deep burials. If this occurs, shore the trench walls before lowering the piping assembly into the trench.

Local, state and federal regulations for shoring should be followed where applicable. As the shoring is removed, it should be replaced with backfill soil.

Organic soils or plastic clays and silts with high liquid limits may be encountered that are incapable of supporting the pipe. Remove the poor soil, and replace it with the proper bedding soil to a depth that will provide a firm stable foundation.

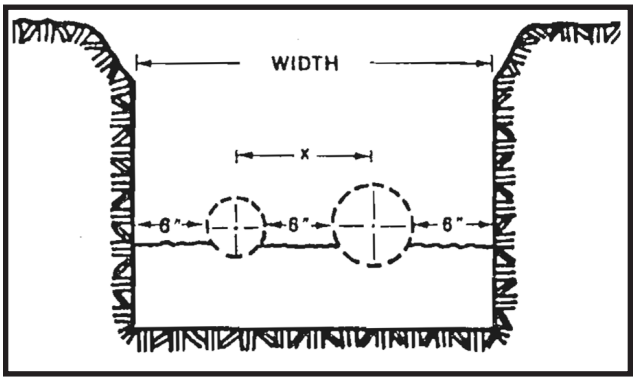

Compute the width of a multi-pipe trench by adding 6 inches to the combined radii of each pair of pipes and, then, adding another 12 inches and the combined radii of the two outermost pipes to allow for clearance.

The minimum recommended trench width for single pipe is 12 inches plus the diameter of the conduit.

For multi-pipe installations, center line dimensions can usually be found in the drawings.

If the center line dimensions are not specified in the drawings, SIMTECH recommends computing the width of a multi-pipe trench by adding 6 inches to the combined diameter of each pair of pipes and, then, adding another 12 inches and the combined diameter of the two outermost pipes to allow for clearance.

SIMTECH
Phone: 877-777-2467 • Fax: 215-547-9129
www.SimtechUSA.com

See contract drawings for specific pipe burial depths. The total trench depth should allow for a 4-inch bedding, the conduit diameter and a minimum 24 inches cover depth above the conduit. It is considered unadvisable to use a shallower burial depth. For depths less than 24 inches, the installing contractor must contact SIMTECH.

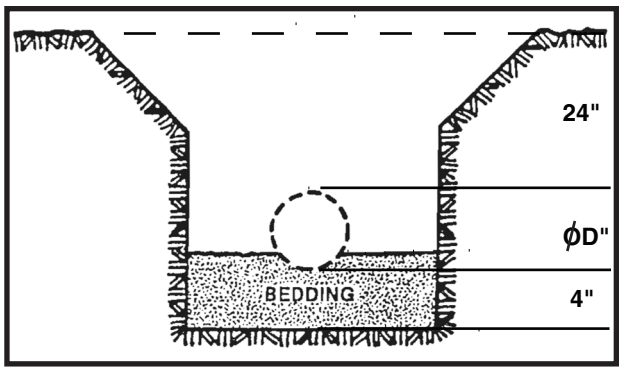

The total trench depth should allow for a 4-inch bedding, the pipe diameter and a minimum 24 inches cover depth above the conduit.

A minimum bedding of 4 inches must be raked uniformly along the entire length of the run. The bed of the run must be graded to a minimum slope of 1 inch per 40 feet. The bedding material should conform with the recommendations in the **Backfill** section of this manual (see Section 9.0).

5.02 Special Trench Conditions.

5.02.1 Rock Bottom Trench.

• A rocky or uneven trench foundation should be covered with a firm soil or gravel before bedding is constructed.

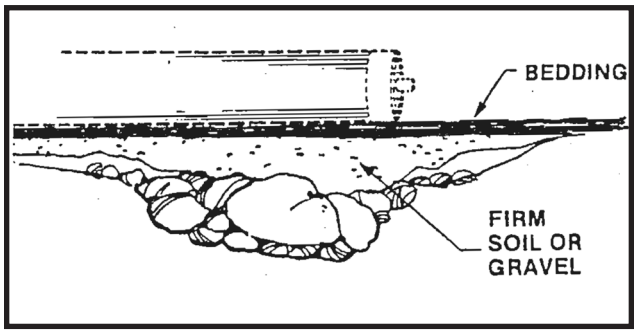

A rocky or uneven trench foundation should be covered with a firm soil or gravel before bedding is constructed.

5.02.2 Unstable Soil.

• When trenching in unstable soil, **DO NOT lay any DoubleQuik® until the trench walls are stabilized with staybracing or shoring.**

• Replace and compact the soil as the shoring is removed.

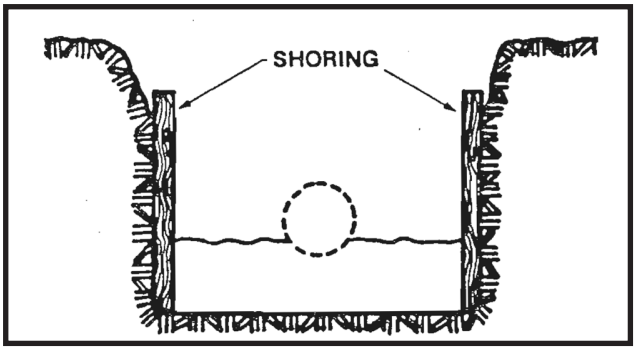

Replace and compact the soil as the shoring is removed.

5.02.3 Granular Soil.

• In granular soil, the trench wall should be sloped at the natural angle of repose.

5.02.4 Over-excavation.

• Any accidental over-excavation should be filled with bedding material and compacted to 90-95% modified proctor

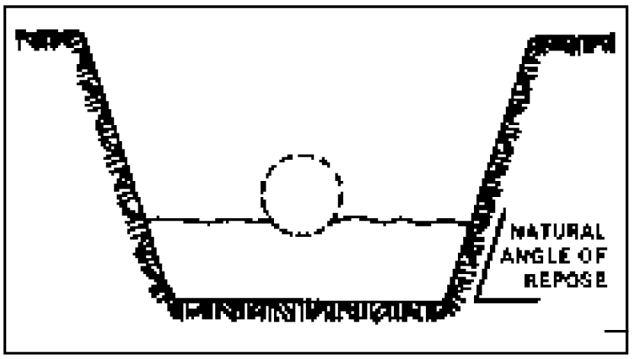

In granular soil, the trench wall should be sloped at the natural angle of repose.

SIMTECH
Phone: 877-777-2467 • Fax: 215-547-9129
www.SimtechUSA.com

6.0 DOUBLEQUIK® ASSEMBLY

NOTE: When installing pipe in ambient temperatures above 85°F or below 40° F, contact your SIMTECH field representative for special weather specific procedures (see Section 6.04.3.1).

6.01 Layout.

After trench excavation is complete and installation of the pipe is to start, the DoubleQuik® assemblies should be distributed along the trench top. Installation can be simplified by laying the assemblies in order along the trench according to the part-drawing layout (PDL).

Laying assemblies in order next to the trench will simplify installation.

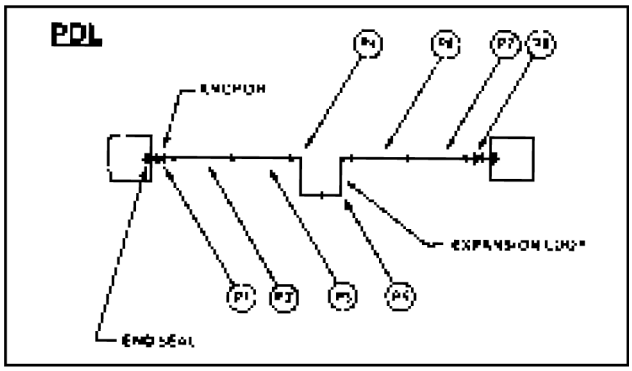

Installation can be simplified by laying the assemblies in order along the trench according to the part-drawing layout (PDL).

6.02 Lowering of the Piping.

- Remove freestanding water in the bell hole and trench before lowering assemblies. The bedding must be dry during pipe assembly installation.
- Hot air welds of carrier piping supports will be done outside of the trench (see Section 6.04.2). When ready, lower DoubleQuik assemblies into the trench. **DO NOT drop piping.**

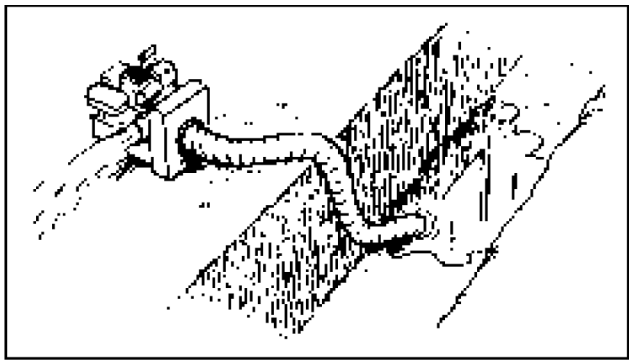

Remove freestanding water in the bell hole and trench before lowering assemblies. The bedding must be dry during pipe assembly installation

6.03 Pipe Connections.

Pipe connections must be made in sequence. Before continuing, verify the correct order of piping assemblies for the length of the run.

NOTE: For DoubleQuik® systems equipped with leak detection, DO NOT commence welding without first consulting Section 4 of the PAL-AT Installation Manual.

6.04 Welding Procedures.

To join DoubleQuik® piping joints in the field, it is necessary to perform two weld procedures, a hot air weld to place the carrier pipe supports, and a butt fusion weld to join the ends of piping. Both procedures are explained in this installation manual

NOTE: High voltage electric power, hot metal, hot plastic, sharp rotating cutters and hydraulically operated machine parts capable of large crushing forces are all present during the fusion process. These weld procedures should be performed only by trained and qualified personnel. These personnel must read and fully understand the procedures before starting the welding process.

SIMTECH
Phone: 877-777-2467 • Fax: 215-547-9129
www.SimtechUSA.com

6.04.a Equipment Required.

Butt fusion welders are portable electromechanical or electrohydraulic machine tools, designed for both shop and field welding of thermoplastic pipe. Their operation is dependent on careful control of pipe alignment, applied force, material and environment to assure reliable butt fusion joints.

The electrical power requirements vary depending upon the specific welder model being used. It is essential that the required power be maintained in order to provide optimum performance of the welding equipment. If the power requirements are not met, equipment failure and poor weld joints will occur. See Electrical Power Requirements table for details.

ELECTRICAL POWER REQUIREMENTS

Containment Pipe Size	Volt	Phase	AMP	Number Of Outlets
3″ thru 6″	120	1	20	2
8″ thru 24″	240	3	30	3

A diagram and detailed description of butt fusion welding equipment are given in Appendix A. The following equipment and tools are needed to support the complete weld process:

- Hot Air Welder: an electrically powered self-contained unit used for welding the inner supports of a pipe in place. The SIMTECH hot air welding procedure is provided later in this manual (see Section 6.04.2).
- Contact Pyrometer: An electronic device used to check the surface temperature of the heating mirror. The pyrometer must accurately measure temperature in the range: 375°F to 500°F (190°C to 260°C)
- Tempil Sticks: These are temperature-specific melt crayons that can be used to check the surface temperature of the heating mirror. Use these crayons carefully, and do not leave any crayon or other residue on the mirror surface. Clean using denatured alcohol and lint-free cloth.
- Timer: Any timing device that can measure the time for various cycles of the welding procedure.
- Cleaning Solvent: A solvent used to clean the mirror surface, preferably denatured alcohol. The cleaner should be applied with a lint-free cloth to assure no residue remains on mirror surface after cleaning.

6.04.b Hot Air Weld Procedure.

DoubleQuik® piping has an internal carrier pipe support at one end of the pipe, hot air welded in place at the factory. In the event that pipe is cut to length the second end support must be installed prior to the butt fusion process. While the butt fusion welds are usually completed in the trench, the hot air weld of the piping supports can usually be done before the piping is lowered into the trench

Hot air welding uses a preset heating element with the appropriate size and type of weld rod and dry air as the recommended weld gas. SIMTECH provides the following:

- Hot-Air Portable welder.
- ¼″ Polypropylene Welding Rod

The installing contractor must provide the following:

- 120v power source with GFI
- End cutters
- Residue-free solvent (denatured alcohol is recommended)
- Clean, lint-free wiping cloths

6.04.c Weld Surface Preparations

Prepare the external surface to be welded by hand-abrading the surface with 50 grit emery cloth. The abraded area should cover the entire welding surface.

- All foreign material must be removed from the pipe.
- Wipe the abrasion residue from the pipe with a clean, lint-free cloth.
- If oil or grease touches the abraded surface, clean with a denatured alcohol and wipe with a clean, lint-free cloth. Wait one minute for the vapors to flash before continuing with the weld procedure.

6.04.d Hot Air Weld

When the proper welder temperature has been established, proceed with the hot air welding process.

- Ensure weld rod selection is compatible with the piping material. Weld rod size depends on the size of the hot air speed tip being used. Weld rod size ranges from 1/8″ to 3/16″, with most field applications requiring 1/8″.
- Cut the end of the hot air weld rod to a 60° angle.
- Insert a support into the unsupported end of the pipe. Place the support into the bore of the containment pipe using the same distance measured at the factory-welded end.
- Clamp or secure the mating pieces to be welded so both hands are free to operate the welder.
- Slide the rod approximately 1/4 inch past the welder tip.
- Hold the welder tip just above the weld starting point for 5-10 seconds or until the weld rod and the seam areas, where the mating parts meet, are tacky.
- Hold the welder at a 45° angle to the junction of the two mating surfaces when welding a fillet.
- Press the tacky end of the welding rod into the weld starting point, and begin moving the welder tip around the weld area while feeding the welding rod into the welder tip.
- Weld the support to the containment pipe and the carrier pipe.
- At the end of each weld seam, strip the welder from the weld rod, and cut off any excess rod left on the welded surfaces.

NOTE: At no time should charring, warping or discoloring appear when the proper weld temperature has been used. DO NOT melt into the surface of the carrier pipe or the containment pipe.

6.05 Butt Fusion Weld Procedure

This procedure was developed to fusion weld thermoplastic pipe. Two pipes, one inside the other, are fusion welded to two identical pipes simultaneously. The inner pipe is called the carrier pipe and the outer pipe is called the containment pipe. The material for both pipes must be the same (i.e. PP, PVDF).

Each pipe material has slightly different heating, joining, and holding attributes, but the end result is the same a fusion joint that is as strong or stronger than the pipe itself.

The principle of fusion welding is to heat two surfaces to a specified temperature, and then to fuse them together by the application of pressure. This pressure causes flow and mixing of the softened material. The thermoplastic molecular structure is transformed from a crystalline state into an amorphous condition. When fusion pressure is applied, the molecules return to crystalline form. The original interface disappears, and the two pipes become one homogeneous pipe. The joint area becomes as strong as the pipe itself.

SIMTECH
Phone: 877-777-2467 • Fax: 215-547-9129
www.SimtechUSA.com

The principle fusion operations are:

- Clamping: the pipe ends are held firmly with clamps to allow all subsequent operations to take place.
- Facing: the pipe ends must be "faced" to establish clean mating surfaces perpendicular to the center line of the pipes.
- Alignment: the pipe ends must be aligned to each other to minimize a mismatch of the pipe walls.
- Heating: provides a thermoplastic heat pattern that penetrates down the pipe walls. This pattern must be formed around the ends of both pipes.
- Joining: the heat patterns must be pressed together with a specific force. The force must be uniform around the interface area of the pipes.
- Holding: the molten joint must be held immobile, under pressure, with a specified force until cool.

6.05.a Environmental Conditions

The welding area must be protected against unfavorable weather conditions: rain, snow, high winds, and exposure to extreme temperatures (above 85°F and below 40° F).
Suitable measures, such as covering the welding site with a tent and using a space heater, should be considered to ensure the pipe wall is dry and has a uniform temperature. If the welding operation is to be done in the trench, the trench must be free of water. When the pipes are heated by intense sun, the inner and outer pipes are heated unequally which can prevent successful welding. The work area should be protected with a tent or temporary awning until the pipe wall temperatures are reasonably equal. To prevent excessive uneven cooling by wind during the welding operation, the pipe ends near the welding site should be closed off.

6.05.b Safety

High voltage electric power, hot metal, hot plastic, sharp rotating cutters and hydraulically operated machine parts capable of large crushing forces are all present during the fusion process. The fusion welding machines should be operated only by trained and qualified personnel. Eye protection and hot work gloves should be used at all times.

6.05.c Welding Data Table

Before the fusion welding process can begin, a table of data related to the specific DoubleQuik® system will be supplied by SIMTECH during the project start-up. This data is designed based on the following:

- DoubleQuik system size, pipe material, and pressure rating. Data is needed for both the carrier and the containment pipe.
- Fusion model of the fusion welding machine being used for the containment size
- Weld Temperature: Setting for the heating mirror, this value is based upon the containment pipe material and the wall thickness of the pipes.
- Weld Pressure: for initial heating and final fusion. The same pressure is used for both operations.
- Drag Pressure: The amount of pressure needed to just move the moveable pipe clamps and the pipe.
- The Bead Width: formed during the heating cycle.
- The Heating Soak Time: The time needed to heat the pipe wall to the proper fusion depth.
- The Changeover Time: The maximum time allowed for the removal of the heating mirror from the machine to the establishment of pressure contact between the pipe ends.
- Cooling Time: the fused joint must remain under pressure.

6.05.d Equipment Preparation.
Place the welder on a solid surface so neither the weight of the pipe nor the machine operation will cause the machine to shift position during the welding cycle.

- Open the clamps and install the proper reducing inserts for the pipes being welded.
- Connect the welding machine and all components to the correct power source.
- Connect the hydraulic unit to the clamping frame.
- Preheat the heating mirror to the proper temperature determined and recorded on the welding table. Check the temperature of the mirror using the pyrometer or tempil stick. Adjust thermostat and recheck as needed. Allow time for mirror temperature to stabilize after any adjustment to the temperature controller.

Approximate operating temperatures:
Polypropylene: 374° F to 410° F (190° C to 210° C)
Polyvinylidene Flouride: 404° F to 487° F (207° C to 253° C)

Use a pyrometer periodically to verify the surface temperature of the tool. Select multiple checkpoints on the mirror faces to ensure uniform surface temperature. In the field, a temperature-indicating crayon can be used on the sides of the heating mirror as a check on temperature conditions. **DO NOT place the crayons on the mirror surfaces where the pipe ends will be welded be-cause the crayon will contaminate the fusion interface.**

The mirror surfaces must be kept clean and free of contaminants such as dirt, oil and melted plastic buildup. This can cause excessive sticking and create unsatisfactory joints. Contaminants can be removed from the hot mirror surfaces using a clean, dry, dust-free and lint-free cloth. Cheesecloth is recommended as an appropriate material for cleaning the hot surface of the mirror. **DO NOT use synthetic fabrics**. Pigments, such as carbon black, may stain a heating surface and probably cannot be removed. Such stains will not contaminate the weld joint surfaces.

6.05.e Mounting Pipe in Machine

On the fixed clamp side of the machine, mount the fixed pipe and clamp. Try to place one of the clamps over the internal support. Let the end of the pipe extend about an inch beyond the inboard side of the clamp. Mount the pipe so that, when the facer is mounted in the center of its mounting location, about 1/2 inch of clearance space is available between facer and pipe.

Mount the loose pipe in the machines moveable end, allowing about an inch to protrude beyond the inboard face of the clamp. Again, try to place one of the clamps over the internal support, and mount the pipe so that, when the facer is mounted in the center of its mounting location, about 1/2 inch of clearance space is available between facer and pipe.

Tighten all clamps securely to prevent the pipe from slipping axially during the weld cycle.
NOTE: When tightening the clamps, en-sure uniform pressure is applied so axial alignment is maintained. **DO NOT over-tighten.**

6.05.f Pipe Alignment.
Draw the pipe ends together, but leave enough room between the two to align the carrier (inner) pipe ends both vertically and horizontally and match up the marks used to identify the location of the detection cable holes.

NOTE: Keep fingers and hands out of the area between the pipes. Pressures exerted by the machine are sufficient to crush bone.

SIMTECH
Phone: 877-777-2467 • Fax: 215-547-9129
www.SimtechUSA.com

To achieve proper alignment, it may be necessary to unclamp and re-adjust the pipe and clamps. 10% of the wall thickness is the maximum misalignment allowable. **Any greater misalignment is NOT acceptable.**

6.05.g Leak Detection Hole.
Ensure that all DoubleQuik® inner pipe supports are properly aligned with a hole at the bottom of the pipe (6 O'clock position). This positioning is critical when leak detection pull cable is installed to ensure alignment when pulling the cable.
Rotate the pipes in the clamping frame to align the hole location marks and then set the clamps. Match up both pipe ends so that the detection pull cable runs straight through, from one pipe to the other.

6.05.h Drag Pressure.
At this time the drag pressure must be determined. Drag pressure is the amount of pressure exerted in the moveable end of the machine to initiate and maintain pipe movement. This pressure is determined by engaging the hydraulic unit in the forward motion (close) position and measuring the actual pressure required to move the pipe.

Set the pressure control valve to minimum and then place the control lever in the "close" position.
Increase the pressure with the pressure control valve until the moveable end just starts to move. Quickly reduce the pressure until the carriage is just barely moving. The gauge is now registering the drag pressure. Record this pressure value on the weld table for future use. The drag pressure may change from weld to weld and must be rechecked.
NOTE: Drag pressure must be added to the weld pressure as determined in Section **6.04.3.4.** For example, if the chart pressure required for welding is 10 bars and the drag pressure is 3 bars, the total actual weld pressure required is 13 bars.

6.05.i Facing Operation.
Place the facing tool between the pipe ends; secure the unit on the guide rails with the cotter pin. The facer must move freely back and forth along the rails. **Figure A**

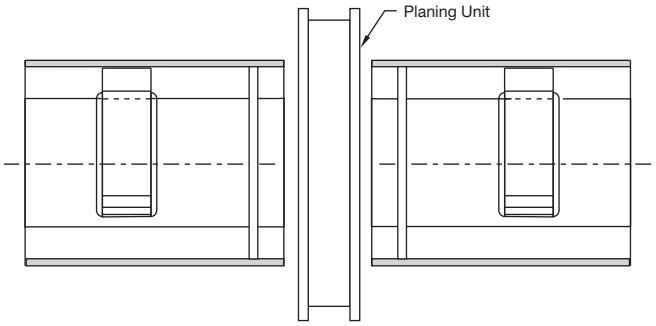

Figure A. Plane carrier pipe flush with containment pipe

NOTE: There is a safety switch in the facing tool which deactivates power if the tool is not securely placed on the guide rails.

- Activate the facer motor. Activate the moveable end by shifting the motion control lever to the close position, and bring the pipe ends into the cutters of the facing tool. Adjust the pressure control valve to apply minimum pressure to the facing tool.
- Carefully shave the ends of both pipes at the same time, using as little pressure from the hydraulic unit as possible (i.e. less than 2-3 bars). Facing cuts should produce a thin, continuous ribbon of material from

both pipe ends. If a clean, square surface has been achieved at the end of one pipe and the other pipe end still requires facing, it is possible to continue the facing operation on the unfinished pipe by placing blocks between the clamp holding the finished pipe and the frame of the facing tool.

• Remove the facer, retract the moveable end by shifting the motion control lever to the open position. DO NOT stop the facer tool motor until the pipe ends have been retracted. To do so leaves a step in the pipe face surface

• Deactivate the facer and, when it has stopped, remove the facer and visually inspect the pipe ends to ensure a smooth, uniform cut has been accomplished. Repeat the facing process until proper end-to-end mating surface has been achieved.

• Clean surface using a non-residue solvent (denatured alcohol) and a clean cloth.

6.05.j Pipe Heating Procedure.

• Place the heating mirror into position between the pipe ends. Verify that the heat of the mirror is correct by using a temperature measuring device. Leak detected systems should use split plate mirrors. **Figure B**

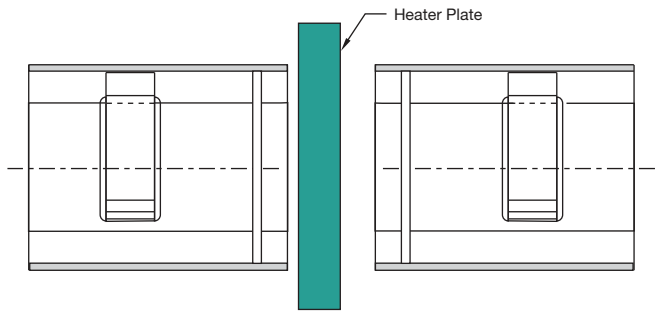

Figure B. Insert heating element between pipe ends

• Align the pull cable to the 6 O'clock position and place it into the split of the mirror.

• Activate the moveable end by shifting the motion control lever to the close position, and bring the pipe ends SLOWLY up against the heating mirror. When the pipe ends are against the mirror, set the machine pressure using the pressure control valve to the designated weld pressure (weld pressure plus drag pressure) shown on the weld table.

• Observe the weld bead forming around the edge of each containment pipe. A uniform bead must form around the entire circumference of the pipe ends. The bead should be approximately equal on each side of the heating mirror.

• Maintain weld pressure until the bead width has reached the correct size given on the weld table.

• After achieving proper bead size, reduce the weld pressure using the pressure release lever. Establish light contact between the heating mirror and pipe ends (1 to 2 bars). Return the pressure release lever to the fixed position to maintain this light contact pressure. <u>This step begins the heat soak period. Refer to the weld chart for proper heat soak time.</u> **Figure C**

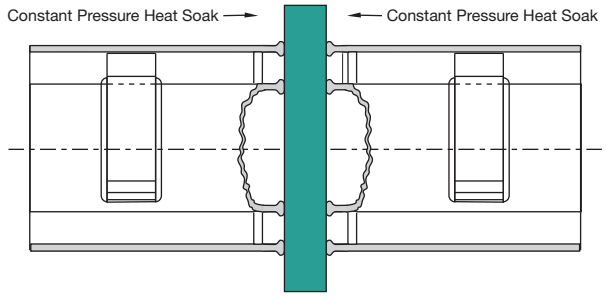

Figure C. Apply welding pressure to the heating element

• Carefully observe the position of the mirror after the pressure is reduced to ensure contact remains with the pipe ends through-out the entire heat soak period. The pipe ends must not lose contact with the heating mirror at any time during this stage of the procedure.
• After heat soak has been completed, quickly retract the moveable end by shifting the motion control lever to the open position, remove the heating mirror, shift the motion control lever to the close position and move the pipe ends back together. Refer to changeover time on the weld chart.

It is imperative that this changeover be performed quickly and within the allotted time, but **DO NOT slam pipes together.**

6.05.k Final Weld Operation.

• Move the pipe ends together to ensure full contact. Using the pressure control valve, increase the weld pressure until the pressure designated on the weld chart (weld pressure plus drag pressure) has been achieved. **Figure D**

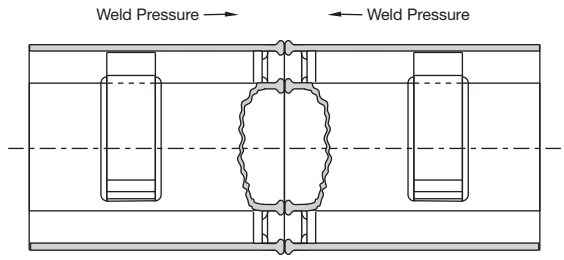

Figure D. Bring pipe ends together and apply welding pressure

• **NOTE:** When re-applying pressure, **DO NOT slam the pipes back together, and DO NOT exceed the recommended weld pressure.** Excessive force will push the molten material from the weld area and thus create a defective weld.
• **NEVER** allow the pipe ends to separate during the welding period. Check alignment marks to assure alignment has been maintained.
• Carefully observe the weld bead that forms during the weld cycle. This bead should be uniform around the pipe, round in shape and should curl back onto the outer pipe surface.

6.05.l Weld Cooling Operation.

• Allow the weld to fully cool before releasing the weld pressure. Refer to the weld table for the minimum cooling time.

• **NOTE**: A fingernail test only confirms that the weld of the containment pipe is cool. Refer to the weld table to determine the cooling time for the carrier pipe weld. **Figure E**

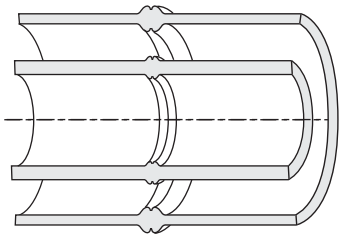

Figure E. Visual inspection of welds

After the cooling time has elapsed, release all pressure from the moveable end by opening the pressure release lever and by setting the motion control lever in the neutral position.

6.05.m Final Operations.

• Loosen all clamps, open all jaws, raise the pipe slightly above the lower clamp jaws and move the machine to the next welding position. Insert another piece of pipe and repeat this entire procedure.

6.06 Testing

The containment piping shall be air tested at 5 psig, the carrier pipe shall be hydrostatically tested at 1.5 times operating pressure or 10 feet of head pressure for drainage systems. The test pressures shall be held for not less than one (1) hour. The contractor shall strictly adhere to the installation guidelines supplied by the system manufacturer and shall keep the second¬ary containment system clean and dry at all times during the installation process.

7.0 BACKFILL PROCEDURES

NOTE: Although it may be necessary to partially backfill the trench in order to perform the piping installation and testing, DO NOT complete backfill operation until after successful hydrostatic test of the carrier pipe, air test of the containment pipe, and test of the leak detection system (if equipped).

7.01 Materials.
The most crucial part of the backfill process is the compaction of soil underneath and alongside the conduit. A hand tamping device can be constructed easily and economically by joining small diameter pipe. This tool will compact the soil firmly and evenly around the conduit and should be used instead of mechanical tampers when compacting to prevent damage to the piping.

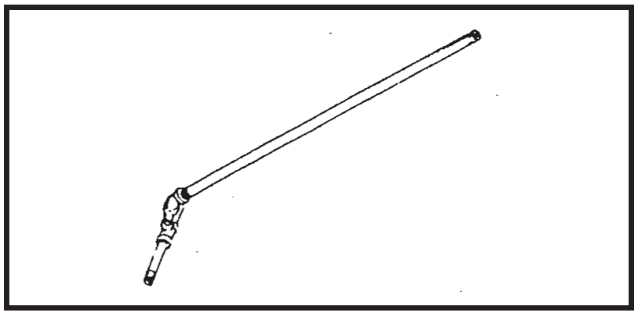

A hand tamping device can be constructed easily and economically by joining small diameter pipe

If SIMTECH's recommended procedures are followed, a minimum burial depth of 2 feet can be established.
Special analysis of minimum burial depths is required at taxiways, runways, railways and other areas of high surface loading conditions. It is recommended that the customer contact both SIMTECH and the local authority for more specific instructions.

7.02 Backfill Description.

1. Sand or a sand-gravel mixture in which the gravel is either pea gravel or crushed stone without sharp edges.
2. Particles not larger than a half-inch in diameter.
3. 90% of the soil passing a No. 4 sieve.
4. 90% of the remainder retained by a No. 200 sieve.
5. Separate all unsuitable soil from the backfill soil.

7.03 Initial Backfill.

- Prior to backfilling, remove any foreign materials, such as shoring, braces and support blocks.

NOTE: DO NOT use frozen fill, sod, cinders or stones greater than a quarter inch in diameter as primary backfill.

- Carefully compact the area directly around the piping in 6-inch layers.
- Proper compaction of the haunching materials, that section of the embedment extending from the bottom of the pipe to the spring line, should be performed to provide soil densities as specified by the design engineer.
- Primary backfilling of selected earth should be packed and tamped to 6 inches minimum over the top of the jacket.
- Compact in 6-inch layers to 90-95% proctor. If surface loading conditions exist, backfill to grade in this manner.

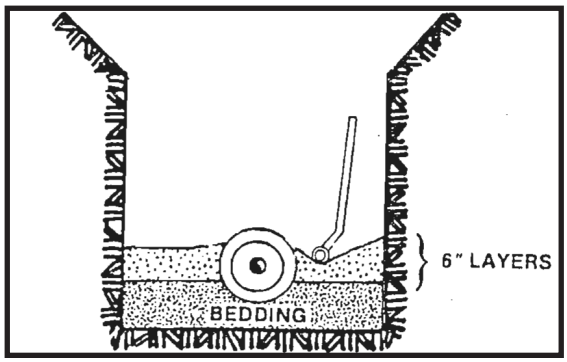

Carefully compact the area directly around the piping in 6-inch layers.

NOTE: DO NOT use wheeled or tracked vehicles for tamping.

7.04 Final Backfill (95%) Compaction.

The backfill operation can now be completed by any convenient means. Remainder of backfill should be free of large boulders, and rocks larger than 6 inches in diameter, frozen earth, or foreign matter.

After placement and compaction of pipe embedment materials, the balance of backfill materials may be machine placed. Provide compaction to required soil densities. Use of mechanical compaction equipment to complete the final backfill is suggested, but **DO NOT use mechanical compactors until the piping is covered with at least 12 inches of firmly compacted soil.**

Under normal conditions, backfill to grade in 1-foot lifts and compact to 85% proctor. Native soil can be used, provided it is non-organic and all particles are less than 1 inch in size.

SIMTECH
Phone: 877-777-2467 • Fax: 215-547-9129
www.SimtechUSA.com

WELDING EQUIPMENT

APPENDIX A

An example of a fusion welder is shown in Figure 1. Shown is the PT-500 fusion welding machine and its components. See Figure 1 and 2 for component identification. All welders consist of the following major components; the differences lie in the pipe sizes each machine can handle:

Main Clamping Frame
(Item 1) Each machine is normally equipped with a total of four clamps. When tightened, these clamps secure the two pipes and ensure correct alignment and orientation while the fusing operations (shaving and heating) are being performed. The moveable clamps are hydraulically or mechanically operated.

One-Piece Heated Platen (Mirror)
(Item 2) An electrically heated device, used to heat the end surfaces of both pipes at the same time. One-piece mirrors are used in systems that do not contain a leak detection cable. It is equipped with an electrical temperature controller, ensuring proper melt temperatures. The platen will melt the end surfaces of all pipe sizes that the machine is designed to weld.

Split Heated Platen (Mirror)
(Fig. 2) Used to heat pipe end surfaces in systems that incorporate a leak detection cable. The mirror is electrically heated and is equipped with an electrical temperature controller. These units are split through the center and hinged, so that they may be opened and closed. A 3/8" diameter hole is located along the split end and slightly off center, so that the hole matches the annulus of the containment pipe. The hole accommodates the steel pulling cable that is used to pull the leak detection cable through the annulus of the containment pipe as the system is assembled.

Planer (Facer)
(Item 3) A power-driven device that shaves the pipe end surfaces to get the faces smooth, parallel to each other, and perpendicular to the axis of the pipes. Oxidation on the pipe surface is also removed by the shaving process.

Clamp Inserts
(Item 5) Cast and machined aluminum inserts for the main holding clamps. They come in various sizes to match the size of pipe being welded. Each insert is marked as to the size of pipe it matches. Two reducing inserts are required for each main clamp.

Control Unit
(Item 4) Contains the hydraulic pump, control manifold block, pressure regulators and pressure gauge used to operate the welder.

Stub End Device
(Item 6) Used to weld the stub end of a pipe or fitting.

Generators
8.5 KW generators (gasoline or diesel fueled), with appropriate sized circuit breakers protecting each outlet, can be used to power the welder.

Extension Cords
The length and wire size of extension cords can seriously affect the performance of the welder. The standards for the acceptable limits of wire gauge and length of extension cords are given in the Electrical Power Requirements table. Variations or substitutions could result in equipment failures.

SIMTECH
Phone: 877-777-2467 • Fax: 215-547-9129
www.SimtechUSA.com

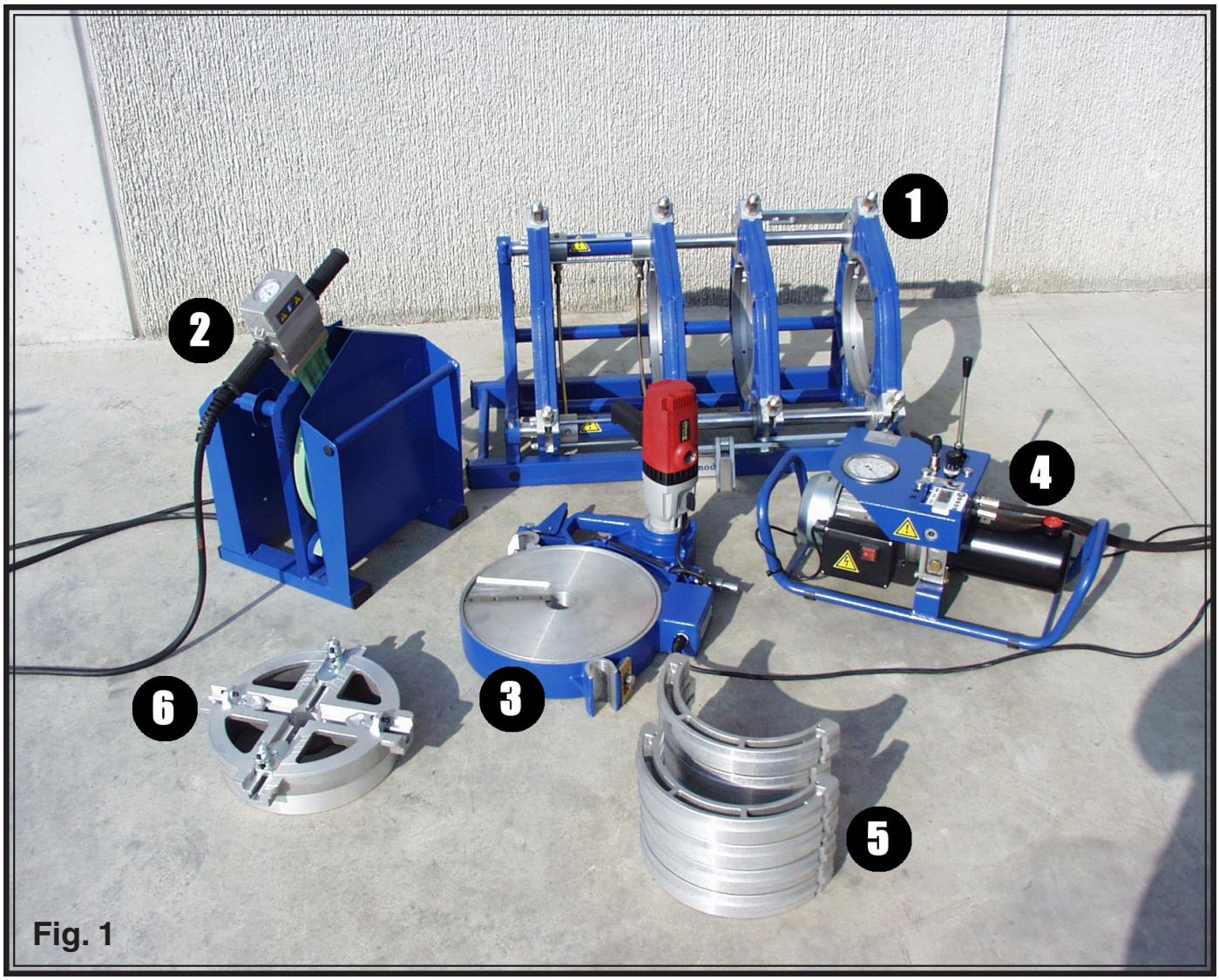

Fig. 1

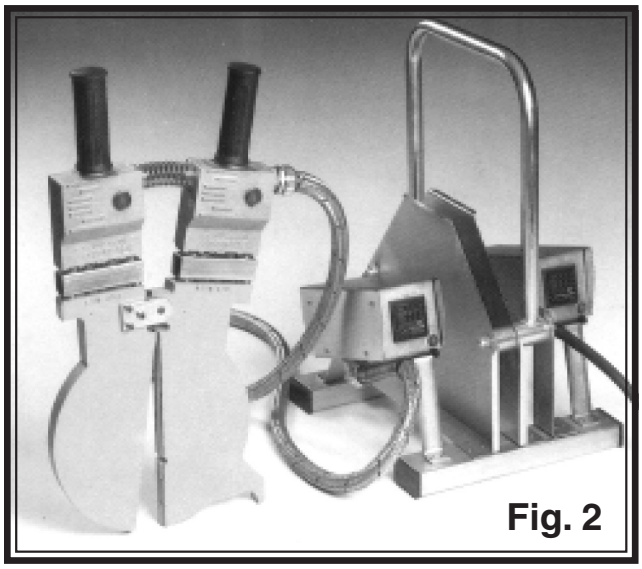

Fig. 2

Split Mirror For Double Containment Systems

ELECTRICAL POWER REQUIREMENTS

Model	Volt	Phase	Breaker Rating (AMP)	No. of Outlets	Minimum Wire Size (AWG)
PM-125	120	1	20	2	12
PM-160	120	1	20	2	12
PT -200	120	1	30	3	8
PT -315/1	240	1	30	3	8
PT -315/3	240	3	30	3	10
PT -355	240	3	30	3	10
PT -500	240	3	30	3	10

Extension Cord Lengths Greater Than 30′ Are Not Recommended. Voltage Drop Along A Greater Length Cord Would Reduce The Voltage At The Welder To An Unacceptable Level.

NOTES:

SIMTECH
Phone: 877-777-2467 • Fax: 215-547-9129
www.SimtechUSA.com

NOTES:

SIMTECH
Phone: 877-777-2467 • Fax: 215-547-9129
www.SimtechUSA.com

Simtech Industrial Products, Inc.
47-A Runway Road, Levittown, PA 19057
Phone (215) 547-0444 Fax 215-547-9129
E-mail: info@SimtechUSA.com
Web site: www.SimtechUSA.com

WARRANTY

Simtech Industrial Products, Inc. products are warranted to be free from defects in materials and workmanship for one (1) year from date of shipment. No claim shall be permitted under this warranty unless Buyer gives Simtech Industrial Products, Inc. written notice of all respects in which Buyer claims the product to be defective. Notice must be received within ten (10) days from the date which the Buyer discovers, or should have discovered the defect. Buyer shall give Simtech Industrial Products, Inc. a reasonable opportunity to inspect the product after notice has been given. This warranty shall not apply to any products or components, which have been subjected to abnormal use, negligence or accident.

Seller's sole obligation under this warranty shall be limited solely on the repair or replacement, as elected by Simtech Industrial Products, Inc., of defective or non-conforming material. To the maximum extent permitted by law, Buyer irrevocably waives all claims for money damages relating to the condition, use and performance of the goods purchased. In no event shall Simtech Industrial Products, Inc. liability exceed the purchase price of the product sold by Simtech Industrial Products, Inc.

In no event, whether because of a breach of warranty or representation or any other cause, whether based upon contract, tort, warranty or otherwise, arising out of the performance or nonperformance by seller of its obligations under this agreement or with respect to the products sold pursuant here to; shall seller be liable for lost earnings, income or profits or indirect, incidental, liquidated or consequential damages.

The implied warranties of merchantability and fitness for a particular purpose except as set forth in this warranty, express or implied, are hereby disclaimed and excluded. Nothing shall be construed as an additional warranty unless specifically designated as such in writing and signed by Simtech Industrial Products, Inc.

Simtech Industrial Products, Inc. reserves the right, in its discretion, at any time and from time to time, to make changes to any specification, data or information contained herein.